GROUP 1 HYDRAULIC CIRCUIT

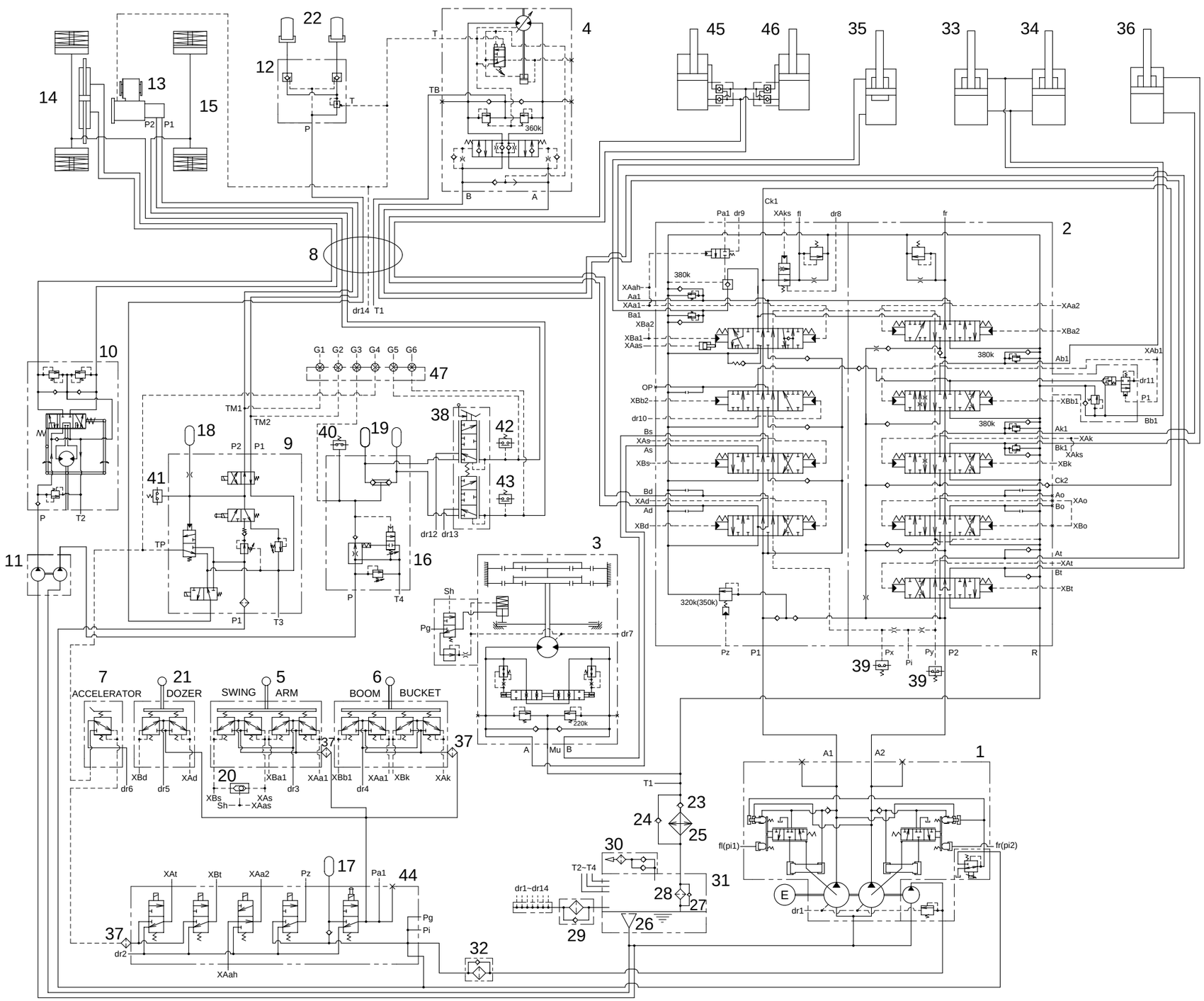

1 Main pump
2 Main control valve
3 Swing motor
4 Travel motor
5 RCV lever(LH)
6 RCV lever(RH)
7 Accelerator pedal
8 Turning joint
9 Transmission valve
10 Steering valve
11 Gear pump
12 Locking valve
13 Transmission
14 Front axle
15 Rear axle
16 Brake supply valve
17 Accumulator
18 Accumulator
19 Accumulator
20 Shuttle valve
21 RCV lever-Dozer
22 Oscillating cylinder
23 Check valve
24 Check valve
25 Oil cooler
26 Strainer
27 Bypass valve
28 Return filter
29 Spin filter
30 Air breather
31 Hydraulic tank
32 Line filter
33 Boom cylinder(RH)
34 Boom cylinder(LH)
35 Arm cylinder
36 Bucket cylinder
37 Last guard filter
38 Brake valve
39 Pressure switch
40 Pressure switch
41 Pressure switch
42 Pressure switch
43 Pressure switch
44 Solenoid valve
45 Dozer cylinder(RH)
46 Dozer cylinder(LH)
47 Gauge block